Rice husk Furnaces

HIGH BEAM

HIGH BEAM Furnace with air preheated system principle ensures smokeless combustion with a high CO2 and a low CO content in the waste gas.

The HIGH BEAM Furnace will burn economically with any **biofuel** such as Rice husk, Corn cobs, Sawdust or Wood chips.

The combustion chamber is manufactured from extra strength refractories and castable Concrete with high temperature resistance ensuring a long life time working.

HIGH BEAM Furnace System can be adapted to most existing boilers or drying plant with available in output range from 300 to 4,000 kW. Multiple furnaces installation allow for greater output and flexibility.

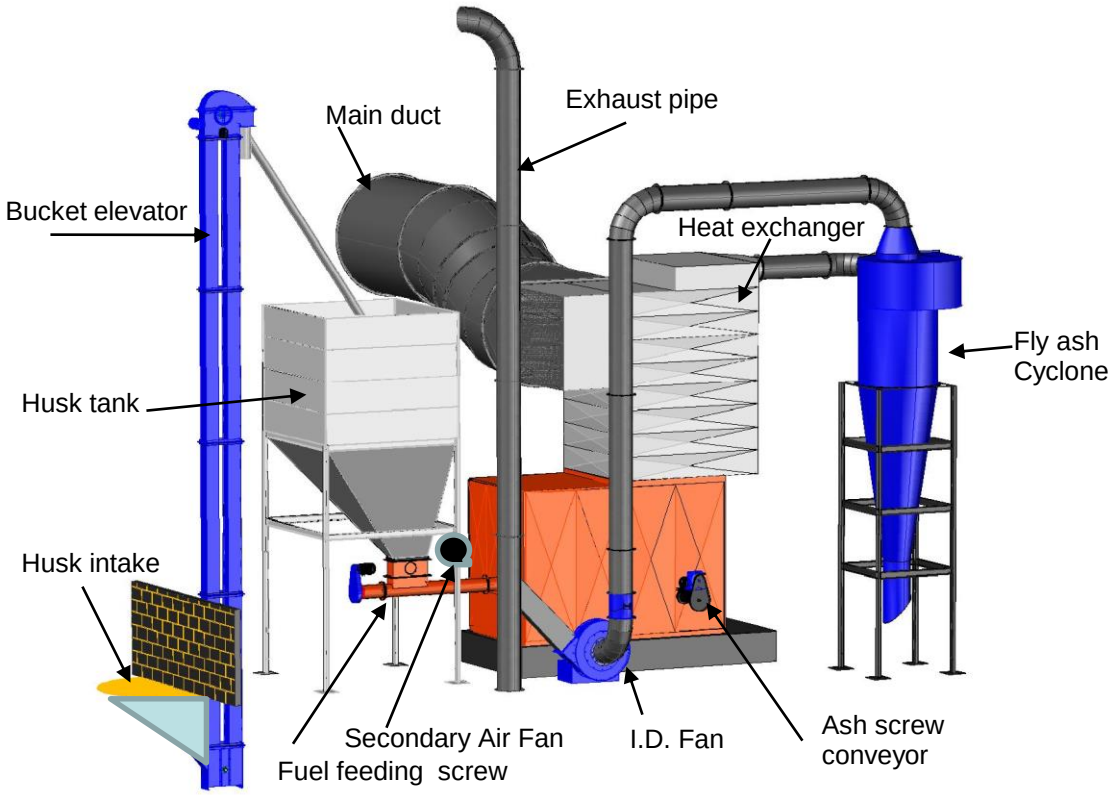

DIMENSION :																	
MODEL	A	B	C	D	E	F	G	H	I	J	K	L	M	N	O	P	Q
UF 30	3404	1800	975	720	918	200	587	3659	1480	1500	1141	1800	975	400	-	1169	645
UF 60	5128	2400	1300	600	1200	250	595	4570	1970	2000	1310	2400	1300	300	1000	2121	758
UF 80	7368	2880	1650	800	1500	388	657	5842	2975	2142	1180	3880	1700	300	1000	2770	798
UF 150	7578	3980	2050	1000	1470	388	465	6122	2986	2442	1180	4540	2150	300	1000	3123	798
UF 2000	9173	4223	2400	1495	2123	388	400	7584	3980	2900	1160	5224	2500	300	1000	3305	985
UF 3000	9131	4223	2400	1495	2427	388	400	8181	3980	2900	1160	5224	2500	300	1000	3305	767
UF 4000	10089	4223	2500	1981	2905	450	400	9345	3980	2598	1160	5224	2500	300	1000	3305	730

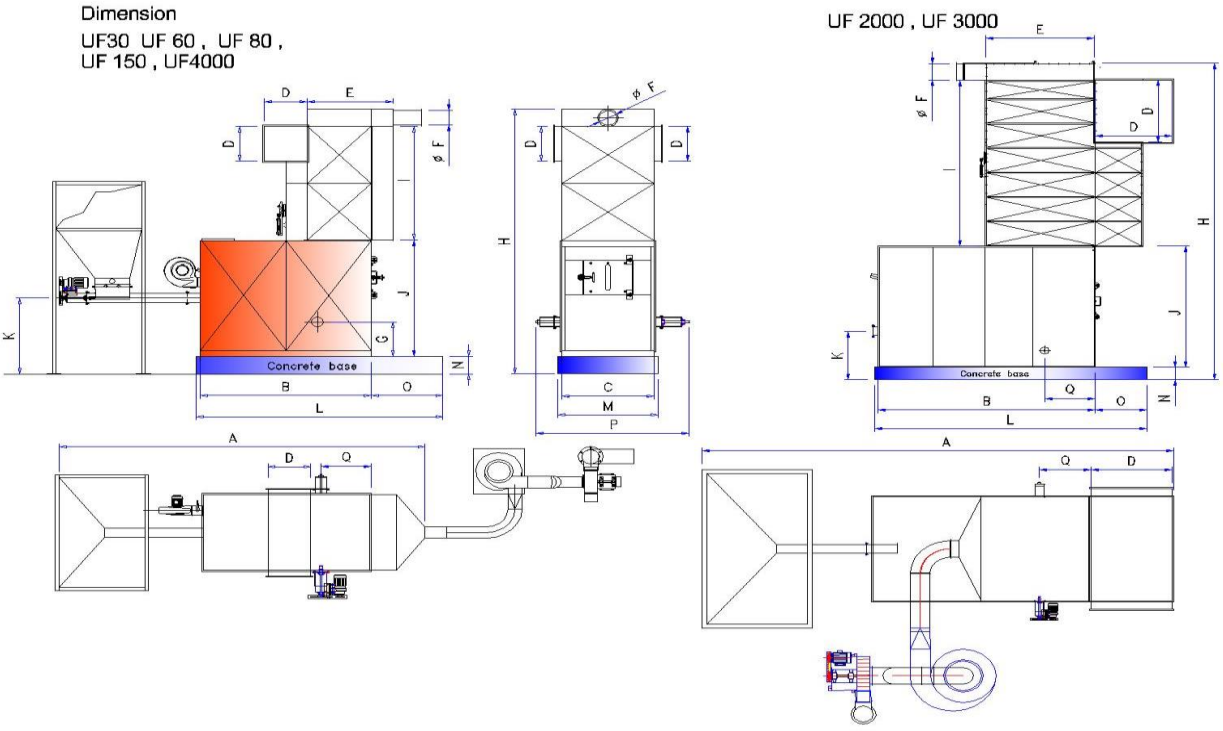

Internal details

- ★ **Automatic Fuel Feeding.**
- ★ **Ash Discharged System**
- ★ **Combustion Air Preheated and Air Cooling System.**
- ★ **Primary and Secondary Air Control System.**

Patent No. 41663

Model	UF30	UF60	UF80	UF150	UF2000	UF3000	UF4000
Heat Output capacity (kW)	300	600	800	1500	2000	3000	4000
Max.Fuel cons. kg/h (rice husk)	100	200	250	400	600	900	1000
I.D. Fan (kW)	1.5	4	4	5.5	7.5	15	22
Secondary Air Fan (kW)	0.75	0.75	1.5	1.5	4	7.5	11
Fuel Feeding Screw (kW)	0.37	0.75	1.5	1.5	1.5	1.5	2.2
Ash screw (kW)	n/a	0.75	0.75	0.75	0.75	0.75	1.5
Total (kW)	2.62	6.35	7.75	9.25	13.75	24.75	36.7
Air flow through heat exchanger m3/min	600	1,200	1,800	2,700	3,500	4,500	5,780

HIGH BEAM Furnace Installations

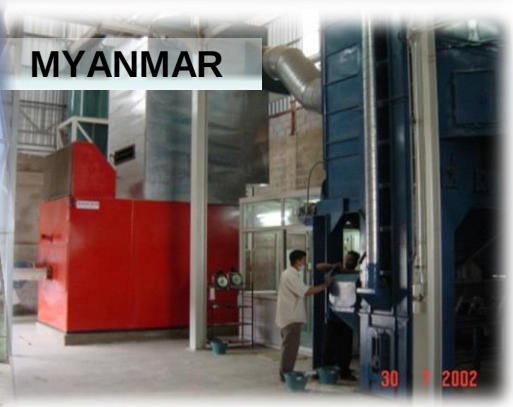

บริษัท ไฮบีม เอ็นจิเนียริ่ง จำกัด
HIGH BEAM ENGINEERING CO., LTD.
99/174 ถ.ติวานนท ต.ปากเกร็ด อ.ปากเกร็ด จ.นนทบุรี 11120
โทร.66 (0) 2583-7383 E-mail : info@highbeamthai.com
Website : www.highbeam.co.th

Dealer :